| REVISION HISTORY | | | | |
|---|---|---|---|---|
| REV | DATE | DESCRIPTION | ECO | BY |
| A | 9/18/2007 | PRODUCTION RELEASE | 11717 | SJ |
| B | 6/21/2010 | REMOVE STAR TRAC P/N: 740-6017 (1), 740-6019 (1), 740-6029 (1), & 740-6128 (4); CHG QTY OF STAR TRAC P/N: 740-6521 WAS: 12 IS: 4 | 13348 | SCN |

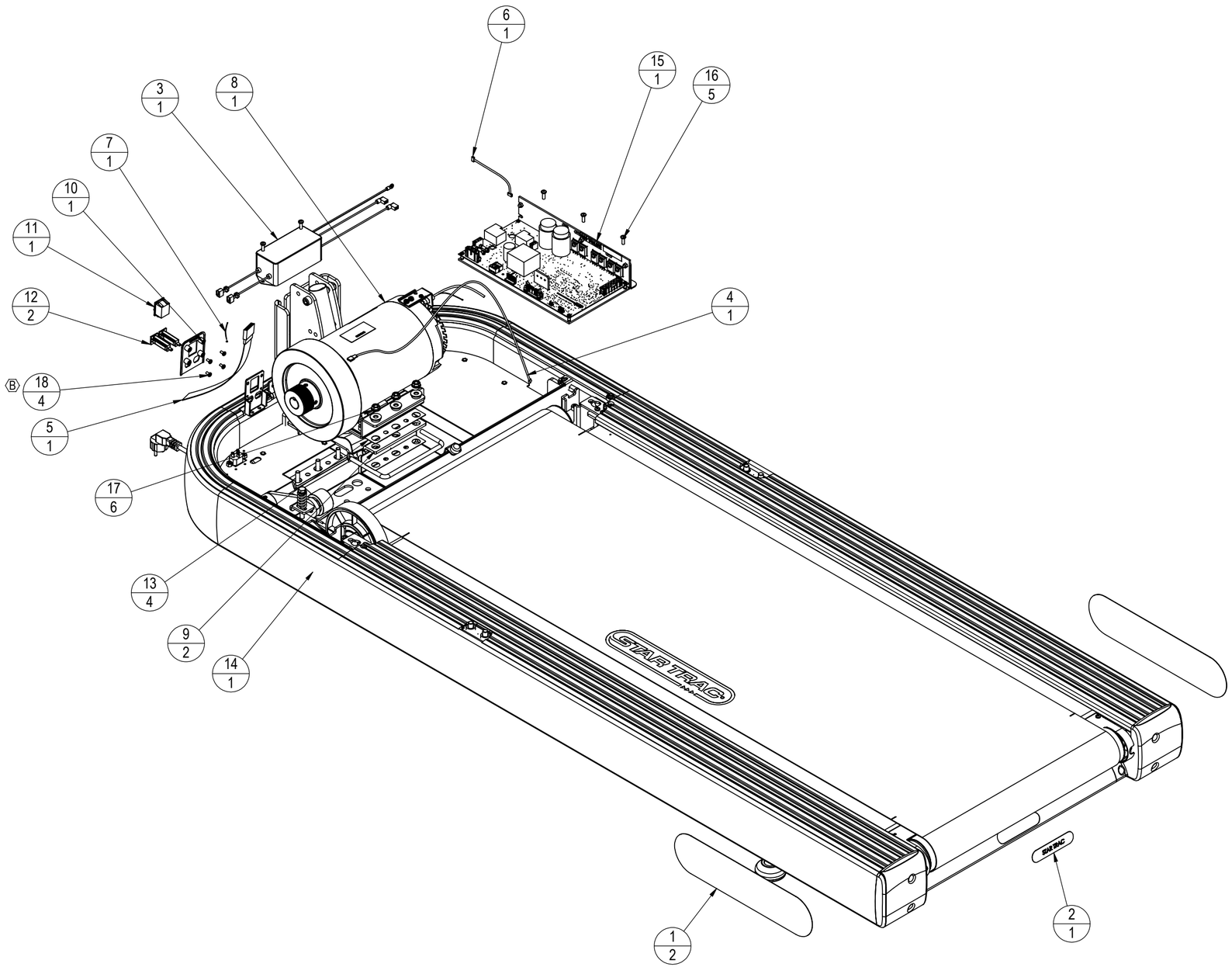


| ITEM NO. | STAR TRAC P/N | PART NUMBER | DESCRIPTION | QTY. |
|---|---|---|---|---|
| 1 | 050-2073 | 050-2073 | LABEL,STAR TRAC,15X3.55" | 2 |
| 2 | 050-2113 | 050-2113 | LOGO,REAR CROSS BAR, S-TR | 1 |
| 3 | 440-0275 | 440-0275 | FILTER, EMI/HARMONICS, 250V, CE | 1 |
| 4 | 740-6013 | 740-6013 | Assy, Cable, AC To MCB, Sport Tread | 1 |
| 5 | 740-6022 | 740-6022 | Assy, Cable, Main Interface, Lower | 1 |
| 6 | 740-6025 | 740-6025 | Assy, Cable, Ext DC Power, Sport Tread | 1 |
| 7 | 740-6036 | 740-6036 | Assy, Cable, Generic GND 2, Sport Tread | 1 |
| 8 | 740-6050 | 740-6050 | ASSY, MOTOR, AC 220V, S-TRc | 1 |
| 9 | 740-6080 | STDP2200 | GASKET, MOTOR BRK INSULATOR | 2 |
| 10 | 740-6081 | STDP2600 | BASE, BREAKER, W/INSERTS | 1 |
| 11 | 740-6084 | F17 | SWITCH, ON/OFF, 250V 16A | 1 |
| 12 | 740-6085 | 13-0009 | BREAKER, 220V, 10A | 2 |
| 13 | 740-6129 | STDP2300 (2) | INSOLATOR, MOTOR PAD, MYLAR, S-TRc | 4 |
| 14 | 740-6146 | 740-6146 | ASSY, ELEV & RUNNING SYS, 220V 10A | 1 |
| 15 | 740-6153 | 740-6153 | ASSY, MCB, AC220V, W/BRACKET, TRc | 1 |
| 16 | 740-6512 | GB818M5*15■■2 | SCREW,GB818M5*15 | 5 |
| 17 | 740-6520 | GB6177M8CL2 | NUT, GB6177M8CL2 | 6 |
| B 18 | 740-6521 | GB818M4*8■■2 | SCREW, GB818M4*8 | 4 |

NOTICE OF PROPRIETARY INFORMATION

THIS DOCUMENT SHALL NOT BE REPRODUCED NOR SHALL THE INFORMATION CONTAINED HEREIN BE USED BY OR DISCLOSED TO OTHER EXCEPT AS EXPRESSLY AUTHORIZED BY UNISEN INC, D.B.A. STAR TRAC.

DOCUMENT STATUS:

NOTES:

| CLASS OF WORK | | UNLESS OTHERWISE SPECIFIED DIMS ARE IN mm. TOLERANCES FOR MEASURE OF LENGTH ARE: 0.5 to 3 | > 3 to 6 | > 6 to 30 | > 30 to 120 | > 120 to 400 | > 400 to 1000 | > 1000 to 2000 | > 2000 | ANGLES = ±2° |
|---|---|---|---|---|---|---|---|---|---|---|
| FINE | | ±0.05 | ±0.05 | ±0.1 | ±0.15 | ±0.2 | ±0.3 | ±0.5 | ----- | |
| MEDIUM | X | ±0.1 | ±0.1 | ±0.2 | ±0.3 | ±0.5 | ±0.8 | ±1.2 | ±2 | |
| COARSE | | ±0.2 | ±0.3 | ±0.5 | ±0.8 | ±1.2 | ±2 | ±3 | ±4 | |
| VERY COARSE | | ----- | ±0.5 | ±1 | ±1.5 | ±2.5 | ±4 | ±6 | ±8 | |

MATERIAL
SEE BOM

FINISH
N/A

VENDOR: P/N: 740-6144

THIRD ANGLE PROJECTION

| | INITIAL | DATE |
|---|---|---|
| DRAWN | SJ | 08-14-07 |
| CHECKED | | |
| APPROVED | | |
| | U.O.M. | MM |

UNISEN, INC. DBA STAR TRAC
14410 Myford Road
Irvine CA 92606

STARTRAC PART NO: 740-6144
REV: B

TITLE: ASSY, BASE, 220V 10A, S-TRc-22

SCALE: 1:7 | SHEET 1 OF 1 | SHEET SIZE: C